SEMINOLE NATION WATERLINE PROJECT

MEKUSUKEY MISSION

SEMINOLE, OKLAHOMA

2012

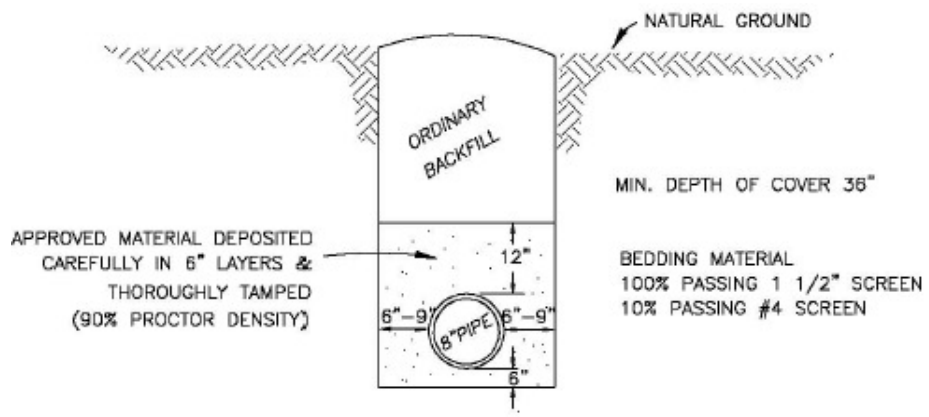

ORDINARY TRENCH SECTION WATER

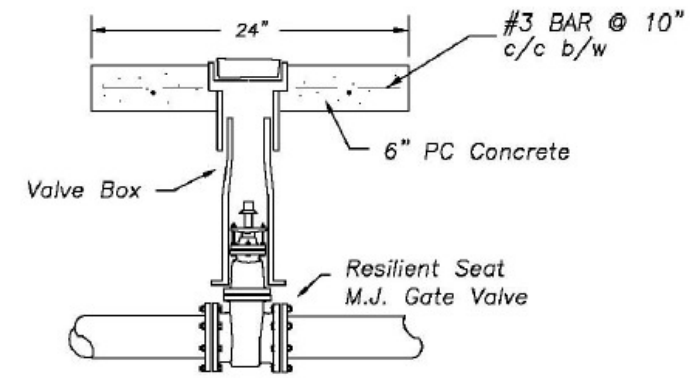

TYPICAL VALVE BOX WITH COLLAR

THRUST BLOCK AREA IN SQUARE FEET				
PIPE SIZE	TEE'S & DEAD ENDS	BENDS		
		90°	45°	221/2°
4"	3	4	3	1
6"	5	7	5	2
8"	7	10	6	3
10"	12	16	9	5

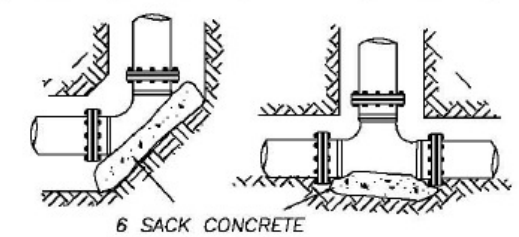

THRUST BLOCK DETAILS

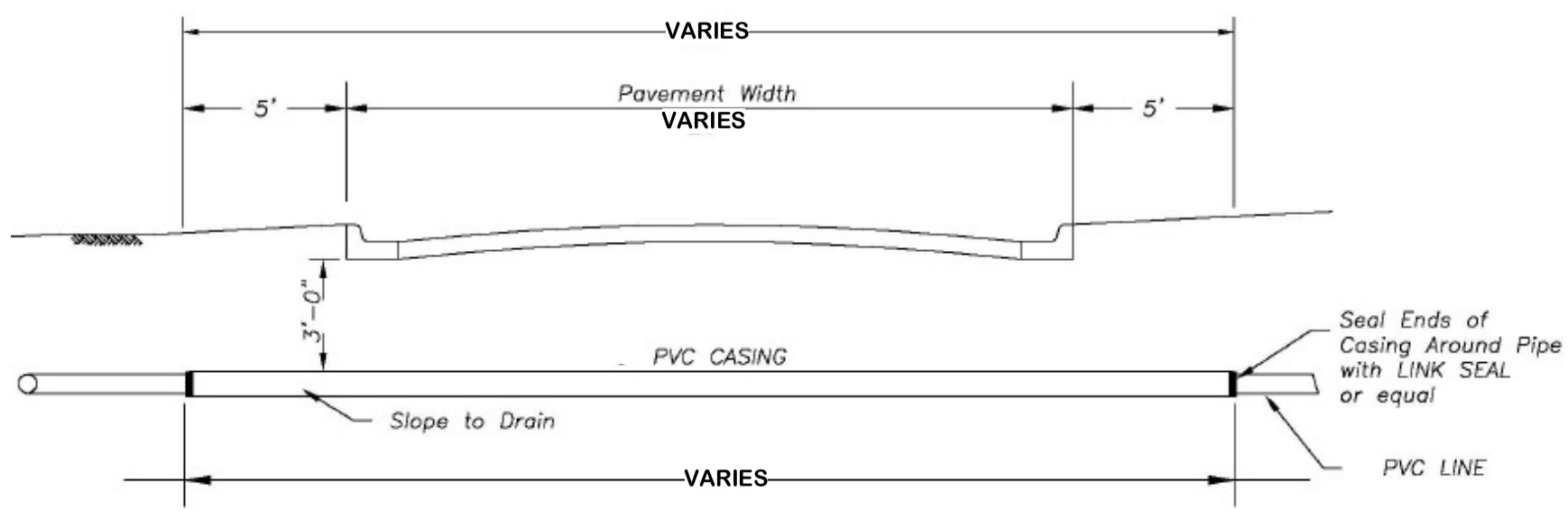

TYPICAL ROAD BORE